1. Reason for the thesis selection

Today, the world is continuously evolving and changing. The rapid development of science and technology along with the explosion of knowledge requires the education system to generate people having scientific and creative ways of thinking and working and capable of coping with new challenges and obstacles in the future. The innovation in teaching objectives, program and method towards thinking-oriented development is an inevitable trend as well as an important strategic objective of education. The study results of many researchers point out that every ordinary individual has thinking ability at different levels. Therefore, the responsibility of teachers is that they have to recognize the characteristics of thinking in each group of students, and propose suitable solutions for developing thinking elements in each student. In the world and Vietnam, there have been some researches in thinking development teaching for students. The studies of the foreign researchers mainly focus on suggestions and strategies oriented towards building up an environment which promote thinking development or in other words "Thinking classroom". The studies of the Vietnamese researchers, on the other hand, concentrate in developing and fostering some specific types of thinking such as critical thinking, creative thinking and explaining thinking for students supposing that they have equal study ability (mainly excellent and good students). Some studies mention stratified teaching in class with different students' levels but they do not study depth in stratified teaching with thinking development objective for each category of students. In general, the matter of building up an environment for appropriate thinking development method for each type of students by specific measures has yet been mentioned in the studies. Our dissertation continues to go deeper into the matter which has yet drawn much attention: Building Thinking classroom in teaching Mathematics through teaching Spatial geometry – a segment of knowledge containing many favorable factors for fostering students' thinking.

2. Purpose of the research:

On the foundation of theory and practical studies of critical thinking, creative thinking characteristics for different student types and thinking development teaching method for students, the research suggests some methods for organizing Thinking classroom in teaching mathematics (particularly the spatial geometry part of grade 11 in high schools) in order to develop thinking in general and critical and creative thinking in particular for every individual in class.

3. Research subject and object:

- Research subject: progress of teaching and learning Mathematics at high school.
- Research object: Methods of organizing Thinking classroom at teaching Mathematics in high school.

4. Scientific hypothesis:

Every ordinary student has thinking ability in different levels. Thinking, in general, and critical, creative thinking in particular can be developed in each students on the basis of the Thinking classroom – where every student is facilitated and encouraged to appropriately develop thinking, especially critical and creative thinking in an interactive environment.

5. Tasks of the research:

- Identify the theoretical basis for organizing Thinking classroom to develop thinking, especially critical and creative thinking for high school students.
- Study the expressions of critical and creative thinking in learning mathematics of high school student groups as well as evaluate the reality of teaching toward critical, creative thinking development for high school students.
- Suggest some methods for building up Thinking classroom in order to develop thinking in general and critical, creative thinking in particular for every student in the class.
- Organize pedagogic practice concerning possibility of suggested methods and the potential to implement in reality.

6. Research methodology

- *Theoretical research method:* Study documents in philosophy, psychology, pedagogy and Mathematics teaching didactics related to the topic; Read research, dissertations, thesis and journals in the topic scope; Analyze the programs, textbooks, exercise books, teachers' books of Geometry at high school level.
- *Practical research method:*

+ Survey – Observation: investigate and conduct surveys in real teaching activities using questionnaire, interview, observation for teaching and learning activities in order to evaluate current teaching status of thinking development, especially critical and creative thinking in some high school in Viet Nam

+ Case study

+ Other supportive methods: Consult experts about the issues in the research scope of the topic; Study the productions of educational activities: analyze the productions of teachers and students (students' notebooks, teaching and learning plan and teachers' lesson plans) in order to contribute to evaluating the process of thinking development teaching in general and critical, creative thinking in particular for high school students; Summarize pedagogic experiences: summarize initiatives experiences of high school teachers, managerial officials in some high school about issues relating to the topic.

- *Pedagogic practice method:* aims at inspecting the possibility and effectiveness of the suggested methods.

7. Contents shown to defend

- The elements of critical and creative thinking do not only form and develop in excellent and good students. Every student, even students of average and below average level, is able to develop qualities of critical and creative thinking at different levels.
- In the process of teaching and learning Mathematics, by organizing Thinking classroom, teachers are able to help students form and develop their thinking, critical and creative thinking.
- To organize Thinking classrooms to develop thinking in general and critical, creative thinking in particular for all high school students in Mathematics class, teachers need to combine different methods in different degree in a suitable way with typical characteristics of students in each class and each lesson.

8. Contribution of the thesis

- Build a relatively complete theory framework of theoretical issues relating to thinking and thinking development of students in learning mathematics, including: codifying and finalizing the concepts as well as the issues relating to thinking, critical thinking and creative thinking in learning mathematics of high school students; clarifying some issues relating to “Thinking classroom” and organizing a “Thinking classroom” in teaching and learning mathematics.
- Identify, analyze some expressions of the critical and creative thinking of the target groups of good, fair, average and below average students in Mathematics.
- Analyze and assess the status of teaching based on developing thinking in general and critical, creative thinking in specific for high school students through teaching spatial geometry.
- Recommend five groups of measures help building up "Thinking classroom" - the class in which each student has opportunities and conditions for the development of their own thinking in general and critical, creative thinking in particular in a suitable way.

9. Structure of the thesis

Apart from the Introduction, Contents, Conclusion, References and Appendix, this thesis consists of four chapters as follows:

- Chapter 1 : Thinking and Thinking classroom in teaching Mathematics
- Chapter 2. Practical research – Critical and Creative thinking features of student groups that have different awareness abilities in studying Mathematics and the reality of teaching Spatial geometry with thinking development objectives for student.
- Chapter 3 : Some methods for building Thinking classroom in teaching Mathematics
- Chapter 4. Teaching experiment.

CHAPTER 1. THINKING AND THINKING CLASSROOM IN TEACHING MATHEMATICS.

1.1 **Overview of some research relating to the topic**.

1.1.1. Research situation in the world:

The works of the authors such as Bloom, Anderson, Krutecki, Guilford, Barron, Torrance, Beyer, Scriven, Richard Paul, Halpern**,** Fisher, Lipman, Marzano, de Bono, Dillon focus on the issues as: nature of advanced type of thinking like critical or creative thinking; personality attributes of people who have critical and creative thinking; stimulation and development of critical or creative thinking for students. From the 80s and 90s of the twentieth century, there have been some studies on the matter of building learning environments that encourage and promote students thinking. In this study, the authors as: Feldhusen và Treffinger (1980), Dillon (1988), McGuinness (1999), Udall và Daniels (2000), A'Echevarria (2008) mentioned to some "strategies", the suggestion oriented towards building up "Thinking classroom" for different subjects and levels.

1.1.2. Research situation in Viet Nam:

The works of some Vietnamese authors such as Hoang Chung, Nguyen Canh Toan, Bui Van Nghi, Vuong Duong Minh, Ton Than, Tran Luan, Nguyen Thai Hoe, Nguyen Duy Thuan, Phan Thi Luyen concentrate on the stimulation and development of some specific types of thinking such as critical thinking, creative thinking, explaining thinking. Some studies mention stratified teaching in class with different students' levels but those does not study depth in stratified teaching with thinking development objectives for each group of students. Generally, the matter of building up teaching and learning environment encouraging thinking development for students has not been mentioned in the previous studies.

1.2 Some basic concepts

1.2.1. Thinking and Mathematical thinking : In summary, the concept of thinking of Vietnamese and foreign authors can be interpreted as follows:

Thinking is a psychological process indirectly reflecting on objective reality; is a generalization, a reflection on general properties and natures in order to find out the regularity relationship or connection of things and phenomena we have not known.

Mathematical thinking is known as the process of cognition and reflection on properties and natures, detection of internal regularity relationship of mathematical objects we have not known. Productions of mathematical thinking are concepts, theorems, rules, methods, inferences etc. which are abstractive, generalized, scientific and strict logical; the knowledge, mainly expressed in written (signs, expressions, formula etc.), are closely connect and support for each other.

Thinking has the following basic characteristics: problematic; indirect; abstractive and generalized; closely related to language; thinking physical properties; intimately related to sensory perception.

1.2.2. Critical thinking in studying Mathematics:

Referring to the views of some authors such as Beyer (1995), Moore & Parker (1994), *Hatcher,* Michael Scriven(1996), Richard Paul (1996), Diane F. Halpern (2003), Chance (1986), Tran Truc Trinh (2003), Phan Thi Luyen (2008), this dissertation offers a definition: *Critical thinking is a kind of thinking in which the thinking object bases on evidences, experiences, beliefs, deliberation, consideration, evaluation and connection of every side from the information resources with positive skeptical attitude to solve problems, predicts development possibility and expand problems.*

Typical expressions of critical thinking ability in learning mathematics of high school students can be summarized into 3 groups: *Ability to re-create, organize, arrange information and problem description; Ability to link, evaluate, process information in order to solve the problem; Ability to reflect.*

1.2.3. Creative thinking in studying Mathematics:

Based on some authors' opinion such as P. E.Torrance, , J.DanTon, I.Lerner, Vu Dung, Ton Than, Pham Gia Duc and Pham Duc Quang this dissertation offers a definition: *Creative thinking is a type of thinking with flexibility, independence and criticism; it is characterized by the production of unique new ideas and effectiveness in problem solving. New ideas are performed by detecting new problems, finding new directions, or new solutions, creating new results.*

Typical expressions of creative thinking in learning mathematics of high school students belong to five key factors: flexibility, fluency, originnality, elaboration and sensibility.

1.3 Personal thinking ability:

The research results of many psychologists and educators have shown that every ordinary individual has the ability of critical and creative thinking. However, there are different levels and expressions depend on each individual. Based on the views of some authors such as Beyer**,** Lipman, Nickerson, Scriven, R. Paul, Halpern**,** Torrance, Guilford and Loowenfeld, Lerner in combination with practical research, we summarize some features of critical and creative thinking in mathematics of groups of below average, average, good and excellent students in the two following tables:

Table 1. Features of students' critical thinking in mathematics

	Below average students	**Average students**	**Good and excellent students**
Ability to re-create, organize, arrange information and problem description	- For the basic, standard problems, students have the ability to sort and initially classify the information obtained from the problem need to be solved; for example, when doing an exercise, they know what information belongs to the assumption and what belongs to conclusions.	- For the basic, standard problems, students have the ability to sort and initially classify the information obtained from the problem need to be solved. In the non-standard issues, students initially know how to dismiss superficial signs to find out nature of the problem.	- Students are able to compare, sort, categorize the information gathered from the problem need to be solved; and to recognize the similarities are not apparent on the surface as well as find out differences in the similarities, from which to see the nature of the problem, do not be misled by the superficial signs. Students know how to reorganize the information, the data in a reasonable way to resolve the problem.
	- When facing complicated obstacles, students usually become embarrassed and don't know how to make questions to find solutions.	- Students can question to search for information to complete the task, but do not know to build a strategic questions system seeking for information and direction to solve the problem.	- Students know how to construct and choose strategic questions system in order to search for information, look for problem-solving orientation.
Ability to link, evaluate, process information in order to solve the problem	- Students give connection to their knowledge and experience; but are not incisive enough in considering the problem.	- Connect to knowledge and experience; concerning and considering the issue in the common cases and circumstances; however, cannot recognizing degenerate, special cases.	- Connect to knowledge and experience; comprehensively considering and concerning the issues, with attention to even the special and degenerate cases.

	- There is a sense to consider, refer to the others' opinions.	- There is a sense to consider, refer to the others' opinions and participate in debates.	- Always ready to consider and consult different opinions, willing to participate in debates to find out ideas and solve problems.
	- Be able to give prediction in a number of problems but have no justifiable arguing basis for predictions.	- Make predictions but no justifiable arguing basis for predictions.	- Be able to argue to make judgments and decisions and check and prove the judgment.
	- Students do not have the ability to self-review and evaluate in order to recognize the shortcomings, mistakes in solving problems.	- The ability of the students in the self-review and evaluation to identify the shortcomings and mistakes in the way of solving the problem are limited.	- Be able to self-review and evaluation to identify the shortcomings and mistakes in questioning and solving the problem.
Ability to reflect.	Students are not capable of abstracting and generalized the issues.	Students are not capable of abstracting and generalized the issues.	Students are capable of abstracting and generalized the issues.

Table 2. Features of students' critical thinking in mathematics

	Below average and average students	**Good and excellent students**
Flexibility	Be able to move from one intellectual activity to another intellectual activitiy, know how to redirect when facing obstacles.	Capable of moving from one intellectual activity to another intellectual activity, initially using analysis, synthesis, comparison, abstraction, generalization and some inference methods such as inductive , similar reasoning; Know how to adjust of thinking if having difficulties…; Able to switch from this solution to a different solution.
	Know how to apply experience, knowledge and skills in circumstances, conditions which	Be able to apply the knowledge, skills, experiences on new circumstances and conditions with changing elements.

	are different in comparison to the mold has been learned.	Thinking without stereotype or machinery. Be able to not initially be influent by the existing experiences, methods or thoughts.
		Recognize the new problems in familiar conditions, see the new functionality of the known objects.
Fluency	Initially recognize objects or matters in a different perspective with guidelines from teachers.	Have the ability to recognize objects, problems under different perspectives. There are multiple perspectives to the need-to-be-solved issues.
	Be able to find out many solutions for some simple issues when having guidelines from teachers.	Be able find several solutions for one issue.
		Be able to combine a lot of different tools, methods into a new direction to solve a problem.
Origin-ality	Initially know how to figure out the relationship of the external events seemingly unrelated to each other when there are hints and guidance from teachers.	Be able to figure out the relationship of the external events seemingly unrelated to each other.
		Be able to find new thoughts and combinations from which to find a unique solution for the posed problem.
Elabora-tion		In some specific problems, have the ability to perform the process of: define the problem need to be solved; plan for solutions; mobilize knowledge and experience along with thinking actions to find solutions; present solution; check the result; develop issues.
Sensitivity		Be able to discover contradictions, mistakes, lack of logic and optimization... from which arises the desire to form reasonable and harmony

		structure as well as create new ones.

1.4. Thinking classrooms in teaching Mathematics

1.4.1. Concept of Thinking classroom

The concept of Thinking classroom has mentioned from the late 80s of the 20th century and has been examined by some authors: : Udall và Daniels; McGuinness; A'Echevarria; Erikson, etc. In this thesis, we think "*Thinking classroom in teaching Mathematics is a class in which not only with a number of good students have thinking but every individual have thinking ability. That is the class in which each student is suitably facilitated and encouraged to develop thinking in general, and critical thinking and creative thinking in particular in the interactive learning environment".*

1.4.2. Characteristics of Math Thinking classroom

In this part, we present some typical characteristics of Thinking classroom via considering 3 basic factors of teaching process: environment, teachers, and students.

1.4.2.1.The Environment in Thinking classrooms

The Environment in Thinking classrooms is a *"democratic"* and *"open"* environment where students feel free to talk about their thinking. The environment of Thinking classroom is a *"safe"* and *"friendly"* environment to students. The environment of Thinking classroom is the environment which *"values"* thinking. The Thinking classroom environment is both *"cooperative"* and *"competitive"*. The Thinking classroom environment is a *"flexible"* environment, from the arrangement of classes, desks and chairs to forms, methods and contents of teaching.

1.4.2.2. Teachers in Thinking classrooms

Teachers play an important role in Thinking classrooms. There are four main roles of teachers in classes: teachers are the ones to plan, design, build the lessons' contents and situations to excite students' thinking and develop students' thinking patterns; They are also the ones to cheer and encourage students in thinking activities to solve matters and experience students' thinking. Teachers are the ones to organize teaching and learning activities in Thinking classrooms and assess students' improvement.

1.4.2.3. Students in Thinking classrooms

In a Thinking classroom, students consistently chase and solve the tasks even though the tasks can be difficult. Students give several reasons for their answers and give different answers for a problem. Students use specific and accurate words to express their ideas and solve the problems. Students actively participate in leaning activities and spend their time on thinking about the solutions of the problems. Students always pay attention to what others speak and are ready to discuss or share the information; Students are aware of their

responsibility in performing common tasks. Students question the other students and teachers. Students review and consider their process; Students raise the challenging issues (issues which require students to apply general knowledge and use their critical and creative thinking at the profound in order to solve them) from the tasks they are done.

1.4.3. The differences between a "traditional classroom" and a "Thinking classroom":

In traditional classes, teachers play the role of the controllers who do everything from present to impart the knowledge; and students are at the position of the receivers for that knowledge. Thinking process often individually and spontaneously takes place with some good students when learning some of the knowledge requires using thinking. In the Thinking classroom, teachers design and organize activities to help students become more active in a multi-dimensional interactive environment by putting students in the situations that contain thinking activities as well as to encourage each student to develop independent thinking and collaborative thinking to create knowledge. Favorable conditions are created for each student to develop appropriately their thinking in general, and critical and creative thinking in particular.

1.4.4. Teachers' strategies in Thinking classrooms

Inheriting the research results of several authors such as Duron, Limbach, Waugh, Feldhusen, Treffinger, Udall, Daniels and A'Echevarria and basing on the characteristics of education in Vietnam, this thesis proposes 5 strategies that teachers need to take to build the Thinking classrooms:

- *Strategy 1: Understanding individual's thinking characteristics in general and critical thinking and creative thinking in particular*
- *Strategy 2: Creating thinking opportunities, orienting and training thinking, critical thinking and creative thinking skills for each student at the various levels in line with characteristics of each student awareness.*
- *Strategy 3: Dividing objectives and tasks to each student's group having different thinking levels.*

Strategy 4: Strengthening the interactions among 3 factors learners- teachers- environment in the learning process.

- *Strategies 5: Encouraging students to track and assess the progress in their cognition by themselves.*

1.5. Content of Spatial geometry grade 11 with the potential to develop critical and creative thinking of the students.

Geometric activities can be concerned as manual and intellectual manipulations of teacher and students on geometric object. There are some basic geometric activities: forming the geometric concepts, propositions; proving, negating geometry propositions; calculating of geometric quantities.

Relations in spatial geometry can be divided into two types: qualitative relationships and quantitative relationship. Qualitative relationships include: Interdependencies relations: Point of the line, point of the plane, line on the plane; Parallel relations: two parallel lines, straight lines parallel to the plane, two parallel planes; Perpendicular relationship: two perpendicular lines, perpendicular lines to the plane, two perpendicular planes; Quantitative relationship includes: distance, angle and acreage.

With the distinct advantages, the topics of Spatial geometry Grade 11 play a crucial role in helping students to form and develop the spatial imagination, critical and creative thinking.

CHAPTER 2. PRACTICAL RESEARCH – CRITICAL AND CREATIVE THINKING FEATURES OF STUDENT GROUPS THAT HAVE DIFFERENT AWARENESS ABILITIES IN STUDYING MATHEMATICS AND THE REALITY OF TEACHING SPATIAL GEOMETRY WITH THINKING DEVELOPMENT OBJECTIVES FOR STUDENT.

2.1. Overview of practical research:

2.1.1. Research purpose: In this practical research, we want to find out the following matters: The differences in critical thinking and creative thinking of student groups in Mathematics; The reality of teaching spatial geometry with thinking development objectives as well as critical and creative think for student groups that have different awareness abilities; Building potential "Thinking classroom" in teaching Mathematics.

2.1.2. Research sample: We have carried out practical research in 10 high schools in 6 provinces and cities including Hanoi, Thanh Hoa, Ha Nam, Bac Giang, Dien Bien Phu Tho.

- The total of surveyed teachers was 128, including 42 Masters (occupy 32.81%); 86 teacher at university (67.19%). The majority of the teachers surveyed have 5 years or more of teaching experience.
- The total of surveyed students in the class was 360, including 3 subjects: 72 below average students, 180 average students and 108 good and excellent students.

2.1.3. Research method: To study the problems mentioned above, we use these following methods:

a. Using questionnaires: questionnaire number 1 for teachers; questionnaires number 2 for students.

b. Using spatial geometry systems of grade 11 to test and assess students' cognitive abilities and knowledge.

c. Teaching observation: Taking part in some classes of spatial geometry grade 11; Viewing students' note books; talking with students to find out their awareness and expression as well about critical and creative thinking.

d. Interview: We consult expert opinions to create papers for in-depth interviews with two purposes: Designing and adjusting questionnaires before the official investigation.; Adding the results obtained from questionnaires and observations in order to clarify the situation.

2.1.4. Data processing methods: Questionnaire method is designed with a number of open and closed questions under 2 forms:

+ Form 1: the questions contained in the questionnaires, answers given 5 scales. They are arranged continuously as increasing levels 1, 2, 3, 4, 5 corresponding to 1, 2, 3, 4, 5 mark. For these questions, we mainly process according to the average score. To calculate the average difference among the level of the scales, we get the highest mark of the scale 5 minus the lowest mark of scale 1 and divided into 5 levels (high level: 5 mark; relative high: 4 mark; average: 3 mark; low: 2 mark; very low: 1 mark). Mark difference among each level is (5-1): 5 = 0,8

+ Form 2: questionnaires are built basing on the criteria requiring the participants to select one or more of the criteria. We mainly process these questions by rate % and rank.

2.2. Results of practical research:

2.2.1. The difference in critical and creative thinking of student groups in learning Mathematics.

Through studying questionnaire and assessing student's answers for tasks given in combination with observing, talking and viewing students' note book to find out students' awareness and expression of critical and creative thinking during class, we found that in all 3 groups: below average students, average students, good and excellent students express critical and creative thinking. However the student groups' critical and creative thinking expression have many differences. There are major differences in critical and creative thinking among good student groups and average student groups and below average ones. There are some differences in critical thinking between the average students groups and groups of students below average but there are almost no differences between the two groups in creative subjects. Despite limitations such as not concerning the description of the problems in new ways; not interested in the relationship between the practical problems and other issues; not doing well general connotation but overall it can be seen that critical thinking of good student groups is quite clear in the learning process. While average and below average students only show critical thinking at a basic level with expression relating to the abilities to regenerate, organize, arrange information and describe the problems; the abilities to link, evaluate, process information to solve problems are generally very poor at the high level in relation to the thoroughness, creativity and ability to reflect issues. Critical thinking of the average students expresses more clearly than that of below average students in expression relating to the abilities to regenerate, organizing, arrange information and describe problems. The average and below average students express their creative thinking

in some ways such as: firstly can change from intellectual activity to other intellectual activities, applying analysis, synthesis and comparison activities; Initially know how to apply the experience, knowledge and skills on the circumstances, conditions changed comparing to the model has been learned; Being able to find other solutions for some simple problems; Initially having abilities to recognize subjects and problems in different ways; however, the expression is still obscure, discrete, single and irregular. Creative thinking of good student groups significantly outperform the average and below average student groups. The distance among the good student groups, average and below average student groups is relatively far. The flexible and clever expression of good student groups is quite clear and regular; the perfect expression, uniqueness and sensitivity are considered as unclear by teachers during class.

2.2.2. Situation of teaching spatial geometry aiming at the development of critical thinking and creative thinking with group of students have different abilities and potentially build up Thinking classroom in Mathematics

Through questionnaire, observation survey, conversations with teachers and students and expert opinion, we realize that generally, the improvement and development of all kind of students' thinking at High school have not been paid proper attention. Nowadays, teachers' lesson plans only express to solve knowledge but do not develop thinking in general, critical thinking and creative thinking in particular. In teaching, most of teachers only pay attention and try to explain whole content in textbook. Teachers rarely use methods, activities of no effect and even curb the development of thinking, critical thinking, creative thinking of students, such as: often call excellent students or volunteers, point representatives answer group discussion questions, give the answer or method when students have trouble, immediately commend when the first student have right answer and pass the another question or problem, etc. Hardly even never do teachers use method for building Thinking classroom to develop thinking, critical thinking and creative thinking, such as: offer different objective, duty to every student; present under teaching situation; encourage multi-way interaction; use open questions in order to activate every student's critical thinking and creative thinking; practice students have ability of consideration, evaluation, adjustability and their recognitions. The reason is the knowledge of teachers is vague and not specific. Teachers are not equipped with synchronous, suitable and useful methods. Schools, educational institutions do not have suitable orientation and teaching plans to develop thinking in each student. Educational officers and teachers agree that: It is important and urgent to develop environment for the development of thinking, critical and creative thinking for students. In the present condition of Vietnam education, the building of "Thinking classroom" totally executable by using synchronously the methods and strategy described in Chapter I.

CHAPTER 3. SOME METHODS FOR BULDING THINKING CLASSROOM IN TEACHING MATHEMATICS

3.1. Building the system of learning tasks and objectives and exercises system of spatial geometry at grade 11 for the development of critical and creative thinking in each group of student.

3.1.1. Building up the system of learning tasks and objectives suitable for every student:

In order to attract all students, building up objective system is gradable and different according to thinking development orientation for students: average and under average students, good and excellent students. To do this, teachers need to base on knowledge and characteristic of critical and creative thinking of students described in Chapter I also refer to 6 lever of cognition by B. J. Bloom.

3.1.2. Building up homework system of Mathematics suitable for thinking development in each group of student.

From one problem or homework in textbook or different document, teachers need to “redo”, “restructure” into new homework to review knowledge and develop critical thinking, creative thinking suitable for all students. Some methods are listed below:

● From the basic problems, teachers can make suitable for the development of good and excellent students by following methods:

- Generalize or make similar to the higher one. For example: From the excercise: "Given square cuboid ABCD.A’B’C’D’. Let M and N be points move on edges AD and C’D’, respectively such as $\frac{AM}{MD} = \frac{C'N}{ND'} \neq 0$. Prove that MN // (BDC’)” teachers may create new excercise as follows "Given rectangle cuboid ABCD.A’B’C’D’. Let M and N be points move on edges AD and C’D’, respectively such as $\frac{AM}{MD} = \frac{D'N}{NC'}$. Prove that MN parallel to the fixed plane ”

- Blur hypothesis by rewriting previous matter indirectly. For example: From the excercise: "Given regular pyramid S.ABCD with base edge $a\sqrt{6}$ and the height $\frac{a\sqrt{6}}{2}$. Determine the dihedral angle between the base and the face ” teachers may create new excercise as follows "Given regular pyramid S.ABCD with base edge $a\sqrt{6}$ and $\angle((SAB),(SAD)) = 60^0$. Determine the dihedral angle between the base and the face ”

- Develop and widen the conclusion. For example: From the excercise: "Given tetrahedron ABCD with three pairwise perpendicular edges AB, AC, AD. Let H be the perpendicular foot drawn from vertex A to plane (BCD). Prove that H is the orthocenter of triangle BCD ” teachers may create new excercise as follows "Given tetrahedron SABC with three pairwise

perpendicular edges SA, SB, SC. Let H be the perpendicular foot drawn from vertex A to plane (BCD). Prove that $\frac{1}{SH^2} = \frac{1}{SA^2} + \frac{1}{SB^2} + \frac{1}{SC^2}$ ”

- Invent “open problem” from basic one.

● From a mathematical problem, matter requiring students spend many thinking phase and need to combine critical and creative thinking. Teachers can assign homework suitable for the development of average and below average students by following methods:

-Review hypothesis, conclusion by specific method. For example: From the excercise: "Given tetrahedron ABCD. Let M, N, P, Q, R, S be the midpoints of sides AB, CD, AC, BD, AD, BC, respectivety and A’, B’, C’, D’ be centroids of triangles BCD, ACD, ABD, ABC, respectivety. Prove lines segments MN, PQ, RS, AA’, BB’, CC’, DD’ are concurrent at point G and $\frac{GA'}{GA} = \frac{GB'}{GB} = \frac{GC'}{GC} = \frac{GD'}{GD} = \frac{1}{4}$ ” teachers may create new excercise as follows "Given tetrahedron ABCD. Let M, N, P, Q, R, S be the midpoints of sides AB, CD, AC, BD, AD, BC, respectivety and A’, B’, C’, D’ be centroids of triangles BCD, ACD, ABD, ABC, respectivety. Prove that lines segments MN, PQ, RS are concurrent at point G, three points A, G, A’ are collinear and $\frac{A'G}{A'A} = \frac{1}{4}$ ”

- Specialize mathematical problem. For example: From the excercise: "Given cube ABCD.A’B’C’D’. Let M and N be points move on edges AD and C’D’, respectively such as $\frac{AM}{MD} = \frac{D'N}{NC'}$. Prove that MN//(BDC’) ”, teachers may create new excercise as follows : "Given square cuboid ABCD.A’B’C’D’. Let M and N be midpoints of edges AD and C’D’, respectively. Prove that MN//(BDC’) ”

- Give some suggestions. For example: From the excercise: "Given regular pyramid S.ABCD whose base is a square ABCD with edge a, and with edge SA of length 2a and perpendicular to plane (ABCD). Calculate the distance between two lines BD and SC” teachers may create new excercise as follows "Given regular pyramid S.ABCD whose base is a square ABCD with edge a, and with edge SA of length 2a and perpendicular to plane (ABCD). Let O be the intersection point of two lines AC and BD. Prove that $BD \perp (SAC)$ and calculate the distance between two lines BD and SC”

● Teacher can develop students’ thinking with different awareness capacities by holding a discussion to solve matter, problem as following: From basic mathematical problem:

Teachers rewrite a new one:

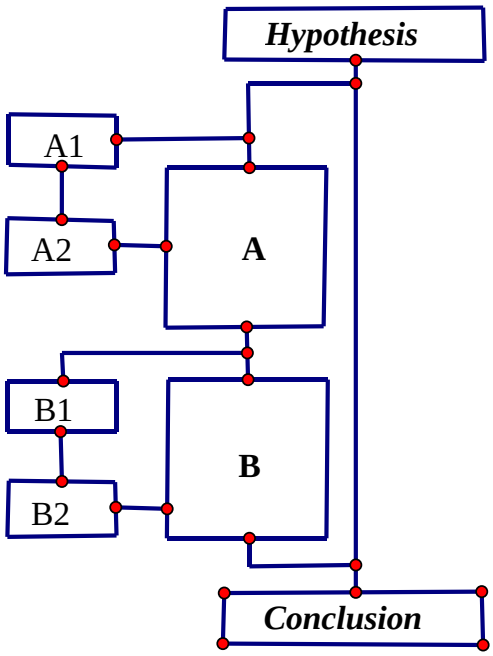

Initially, some excellent and good students will solve the problem through basic mathematical problem. However, there are a few students try their best again grasping at straws. They will answer question A,B,C, etc , solve the problem and come up to conclusion. If this has difficulty in question A, they will move to question A1, A2, A3 etc. and answer question A. Then they go on the same thing. This process continues until when all students able to solve the problem. For example: From the excercise: "Given pyramid S.ABCD whose base is a trapezoid ABCD with edges AB = 2DC = 2AD = 2BC, and with edge SA perpendicular to plane (ABCD). Plane (P) passes through A and perpendicular to SB and cuts edges SB, SC, SD at poins B', C', D', respectively. Prove that quadrilateral AB'C'D' is inscribed in a circle" teachers may create new excercise as follows: "Given pyramid S.ABCD whose base is a trapezoid ABCD with edges AB = 2DC = 2AD = 2BC, and with edge SA perpendicular to plane (ABCD). Plane (P) passes through A and perpendicular to SB and cuts edges SB, SC, SD at poins B', C', D', respectively. Prove that quadrilateral AB'C'D' is inscribed in a circle.

a) Prove that AC' ⊥ (SBC)

b) Prove that AD' ⊥ (SBD)

c) Prove that quadrilateral AB'C'D' is inscribed in a circle

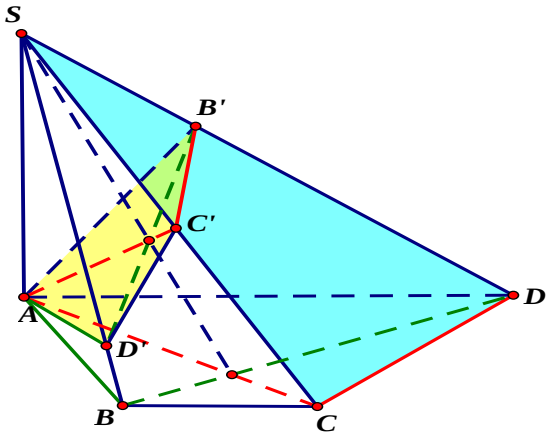

a1) Prove that BC ⊥ (SAC)

a2) Prove that AC' ⊥ (SBC)

b1) Prove that BD ⊥ (SAD)

b2) Prove that AD' ⊥ (SBD)

c) Prove that quadrilateral AB'C'D' is inscribed in a circle"

3.2. Teacher motivate, inspire and stimulate to students think by changing the content of the teaching into case studies

According to psychologists, people just start to think actively when the demand for thinking arises which means facing difficulties and suggestible situation need to overcome. Suggestible situation suggest is a situation relating to theory or reality difficulties that students know the essentiality and can overcome, but not immediately because of a rule, and undergo a process of positive thinking, action to transform or adjust available knowledge.

To create a teaching situation can stimulate the critical thinking, creative thinking of students, teachers can use such methods: Forecast through visual comments, Practice in real

life; Overturn problem; Consider the same thing; Generalize; Exploit old knowledge; Name mathematical problem that the settlement leads to new knowledge; Find mistakes in solution.

For spatial geometry in high school we would like to suggest some methods that stimulate the critical thinking, creative thinking of students according to Vygotsky theory about the zone of proximal development:

- Design teaching situation as a problem relating to plane geometry knowledge or previous knowledge through the similar or general one. For example, teacher may design a situation to teach solve the exercise: “Given tetrahedron ABCD with three pairwise perpendicular edges AB, AC, AD. Let H be the perpendicular foot drawn from vertex A to plane (BCD). Prove that $\frac{1}{AH^2} = \frac{1}{AB^2} + \frac{1}{AC^2} + \frac{1}{AD^2}$ ”as follows : “a) Given triangle ABC with right angle at A. Let H be the perpendicular foot drawn from vertex A to edge BC. Find the equality contains $\frac{1}{AH^2}, \frac{1}{AB^2}, \frac{1}{AC^2}$. b) Given tetrahedron ABCD with three pairwise perpendicular edges AB, AC, AD. Let H be the perpendicular foot drawn from vertex A to plane (BCD). Find the equality contains $\frac{1}{AH^2}, \frac{1}{AB^2}, \frac{1}{AC^2}, \frac{1}{AD^2}$.”

- Design teaching situation as a problem with the same logical structure with previous one: Each problem is formed base on agreement between two elements: logical structure and language. In other words: Problem = logical structure + language. Logical structure is a combination of conditions (hypothesis) and the conclusion, it is formed through the logical term, logical clause, logical inference. Language expresses problem structures. The exploitation of the logical structure or language or a combination of both is a method to create situations. For example, teacher may design a situation to teach the properties of tetrahedron’s centroid as follows : "Given tetrahedron ABCD. Let M, N, G be the midpoints of sides AB, CD, MN, respectivety and A’ be centroids of triangles BCD.

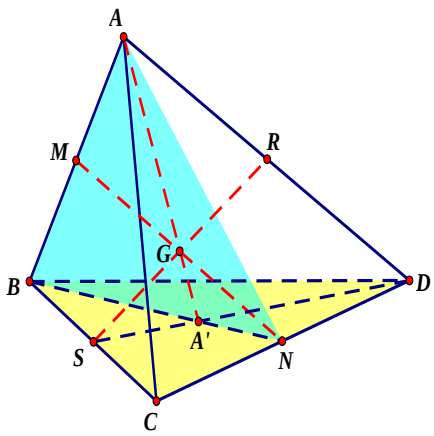

a) Prove that three points A, G, A’ are collinear and $\frac{A'G}{A'A} = \frac{1}{4}$.

b) Let M, N, P, Q, R, S be the midpoints of sides AB, CD, AC, BD, AD, BC, respectivety and A’, B’, C’, D’ be centroids of triangles BCD, ACD, ABD, ABC, respectivety. Prove lines segments MN, PQ, RS are concurrent at midpoint G of each line segment and AA’, BB’, CC’, DD’ are concurrent at G such as $\frac{GA'}{GA} = \frac{GB'}{GB} = \frac{GC'}{GC} = \frac{GD'}{GD} = \frac{1}{4}$,,

- Design teaching situation as a problem with the same method with previous problem but increases difficulty level.

Process of building, deploying a mathematical situation is divided into 2 periods and six steps:

Phase 1: Create situation including 2 steps:

Step 1: Identify the purpose and contents of the situation;

Step 2: Design a specific situation.

Phase 2: Deploy situation including 4 steps:

Step 3: Instruct;

Step 4: Deploy scripted situations;

Step 5: Implement institutionalized role by teachers;

Step 6: Evaluate.

3.3. Increasing the use of effective question system to guide and promote critical thinking, creative thinking of all students

3.3.1. Effective question system

Through questioning methods of the great philosopher-Socratic and the study of the authors such as Dyer & Moynihan (2000) and Ivan Hannel (1999) about "effective questions teaching-HEQ" [97], combined with reality experience, we offer the construction of effective question system in teaching Math. That has a wide range of answers, mobilizes more intellectual activities, thinking of students and attract them participate in lessons with a proactive and positive attitude.

The effective question system has the following characteristics:

a) Question system leads students from the known to the unknown, from existing knowledge to new knowledge, helps students to think and respond orderly of thinking development, train them overcome difficulties to achieve success. The questions develop thinking in general, critical thinking, creative thinking in particular and attract all students to respond. To do this, teachers can develop questions based on the level of awareness by Benjamin Bloom (1956) and Lorin Anderson (1999) proposed.

b) The effective questions have a deep and wide range. The depth and scope of questions is determined by the width of the answers and the quantity; quality of the intellectual activities, thinking is mobilized to answer questions. To do this, teachers can use the following method: Increasing the use of questions to be "challenged"; Increasing the use of open-ended questions; Increasing the use of open questions; Using these questions to encourage diversity in the student's answer.

3.3.2. Some techniques using the effective question system:

● Teachers write questions containing the main as well as additional questions, the questions will be used if the first question is not successful.

● Teachers prepare specific questions focus on the lesson and write down the main question on the blackboard.

● Teachers take the time to wait for students to find answers or respond to the request.

● Teachers operate positive activities for all students by:

- Teachers prepare questionnaire and tell the students: "they will be in turn be called up to the board" or "I'll call any student answer the question";
- Teacher will not express an opinion or immediately comment the students' answers.

●Teachers accept and welcome diversity in the student's answer.

For example: Building and using effective question system to teach the theorems of necessary and sufficient condition for two planes perpendicular to each other: Given square cuboid ABCD.A’B’C’D’.

Question 1 (memory level - awareness, open question): Determine the angle between the plane (AA'B'B) and plane (ABCD). Find the lines that lie in (AA’B’B) and perpendicular to (ABCD)

Question 2 (aggregate level; expanded question): Give two planes (P) and (Q) perpendicular to each other. Exists or not a line that lies in this plane and perpendicular to the other plane? Prove your statement.

Question 3 (aggregate level). Consider plane (α) contains AA '. Find the angle between plane (ABCD) and plane (α)

Question 4 (aggregate level) From the above answers, give the theorem of necessary and sufficient conditions for two planes perpendicular to each other and prove the theorem?

Question 5 (aggregate level, open-ended questions): Express the corollaries that to be infered from the theorem?

3.4. Organizing multi-interactive groups to improve positive thinking of students

There are 5 steps:

Step 1: Offer the problem, situation, awareness task: teachers indirectly transfer knowledge to students through a problem situation for students accept this situation as a situation arises from their awareness demand.

Step 2: Organize learning groups:

- *Create learning groups*: Based on the expectation, teachers instruct students create interactive groups and arrange reasonable seat.
- *Instruct activities in group*: Before doing the activities, the teacher should instruct students assign role including leader, secretary, observer and reporter. These roles can be alternated regularly in the activities.
- *Assign the tasks for each group:* teachers help student understand the common target, and clarify the responsibilities of each student.

Step 3: Implement, manage and adjust the interaction. This Thesis considers 4 interactive groups: independent student interacts with situation, problem or content knowledge; student interact with other student in the group; inter-group interaction activities; interact between teachers and students:

Step 4: Test and evaluate: The assessment ensures the continuous and comprehensive evaluation including knowledge, skills, combined with thinking and the ability to interact, co-operate.

Step 5: Summarize: teachers decide to control, adjust and handle obstacles (if any), perform the role legitimized knowledge and make conclusions.

3.5. Training the students for self-study planning, self-monitoring, evaluating and adjusting of their awarness and their own learning process.

To train the students for self-learning planning, self-monitoring, evaluation and adjusting their awarness and their own learning process, teachers can use the combination of the following methods:

- Making example and explaining to students how to monitor, adjust and evaluate their own thinking process.
- Using the questions requiring students to think, to consider the knowledge and experience then choose the solution. To solve this problem, which knowledge, concept, quality, theorem, rule need to be used? Which method can be used?
- Using the questions requiring students to identify target, plan their study: Which steps you use to solve the problem?
- Using the questions requiring students to monitor and adjust the process of self-awareness: In the steps outlined to solve the problem, what is the most difficult step? Why? What is the difficulty you encounter when performing this step? What are the methods to solve this problem? Which one do you choose? Why? Why these theory, rule ... are not applicable to this problem ? How can we adjust, modify, supplement or improve to be applied to this problem?
- Using the questions requiring students to evaluate awareness process, studying process and results against target, proposed plan: During the class time, what have you done? What have not been done? Make a plan to resolve the remains.
- Encouraging students to participate in the discussion which requires students give clearly, coherent answers in order to the other students comment and evaluate. Thereby students consider, evaluate, adjust their thinking.
- At the beginning of class, teachers writes the knowledge on the board and summarize the knowledge with the interpretation of meaning at the end.

- Asking the students to: write down "study diary" all that is learned after each lesson; record the work done and not done against the target of proposed plans. Every month, teachers and students will review the "study diary" together to evaluate their progress.

CHAPTER 4. TEACHING EXPERIMENT

4.1. Overview of the teaching experiment:

4.1.1. The purpose: In order to test the scientific hypothesis of the thesis; Initially, test the feasibility and effectiveness of building Thinking classroom within the subject; Learn the ability to deploy reality subjects taught at the high school Mathematics in Vietnam nowadays.

4.1.2. The target and time:

Experiment 1: Test Mathematics capacity of 04 students (under average, average, good, excell students). They are from Geography class, English class 2 and Computing class of grade 11 at Nguyen Hue Gifted High School - Ha Noi from November, 2013 to May, 2014.

Experiment 2: in class 11A1 of Lien Ha High school - Dong Anh - Hanoi from November, 2014 to May, 2015.

Total experiment lessons: 16 lessons.

4.2. The content and result :

4.2.1. Experiment 1:

The author and Ms. Pham Hong Ly, Ms. Le Thi Hoa and Mr. Nguyen Van Tien, teachers of maths, participate in Computing class, English 2 class and Geography class of grade 11 period 2012-2015 at Nguyen Hue Gifted High School - Ha Noi, 12 lessons for each class. Research students choose 4 students from these classes to monitor the process: Phan Thi Tu Uyen (Student 1) who has excellent ability; Dang Hoai Nam (Student 2) who has good ability; Tran Thu Ha (Student 3) average ability; Pham Thu Huong (Student 4) under average ability. In 3 times of the experiment, after learning the lessons, they have to do 3 tests within 90 minutes for each.

4.2.2. Experiment 2 :

The author and Mr. Pham Duc Duan, a teacher of maths participated in class 11A1 period 2013-2016 at Lien Ha high school - Dong Anh - Hanoi.

4.2.2.1. The first experiment (November, 2014):

We had observed and took notes in class 11A1 at Lien Ha high school - Dong Anh - Hanoi. In the thesis, we presented 2/4 lesson about Instroduction to lines and planes (textbook, geometry 11, pg 48-52) by Mr. Pham Duc Duan taught on 28/11/2014 . Then 45 students did test within 90 minutes.

4.2.2.2. The second experiment (February, 2015):

We taught lesson "Lines and planes in space. Parallel relations "in class 11A1 at Lien Ha high school - Dong Anh - Hanoi. In the thesis, we presented: Two parallel planes by

research students and teacher Pham Duc Duan composed and Mr. Pham Duc Duan directly taught on 16/02/2015. Then 45 students did test within 90 minutes.

4.2.2.3. The third experiment (April, 2015) :

We taught the lesson "Vectors in space. Perpendicular relationship in space " in class 11A1 at Lien Ha high school - Dong Anh - Hanoi. In the thesis, we presented: "A line perpendicular to the plane," by research students and teacher Pham Duc Duan composed and Mr. Pham Duc Duan directly taught on 25/04/2015. At the end of the school year, 45 students took the exams within 90 minutes.

Some comments through results after the experiments:

Study result:

Experiment 1: 4 students have made great progress in achievement and study result:

- Study result of grade 11 in second semester: in Math, the first student had 9.8 GPA; the second student had 8.9 GPA; the third student had 7.8 GPA; the forth student had 6.8 GPA.
- In national and university entrance examinations in 2015, the result of 4 students as following: the first student got into National Economics University with a total score of 26.5, Math score at national exammination was 9.75; the second student got into Hanoi National University with a total score of 24.0, Math score at national exammination was 8.25; the third student got into Hanoi University with a total score of 24.25, Math score at national exammination was 7.0; the forth student got into Geography Department - Hanoi National University of Education with a total score of 25.5, Math score at national exammination was 5.0.

Experiment 2:

In second semester period 2014-2015, class 11A1 had 18/45 excellent students ; 15/45 good students ; 12/45 average students but Math GPA from more than 6.0 and did not have under average students.

Attitude, conscious learning:

- Students concentrate with high interest in the tasks that teachers give
- All students participate in the discussions positively. Students often share, discuss and give questions to their teachers.
- Students often give varried questions and answers.
- Students often give questions to classmates and teachers. Some questions have effectiveness for developing consciousness of students and the others. Besides, they lead to generalize problem, overturn the problem and open new one.
- Students regularly review and adjust the awareness in solving problem. Students has a habit of review, evaluation, conclusion relating to the process of self-awareness.

Expression of critical and creative thinking:

- Students is capable of comparing, arranging and sorting information, know how to describe problem in several different ways and see the substance of the problem. Students know how to establish question system to seek information and resolution.
- Excellent and good students can connect knowledge, experience; consider the issue comprehensively and pay attention to special changed case. As the same for average and under average students but consider problem more thoroughly and begin to have interest in special changed case.
- Excellent and good students are capable of making decision as well as can prove it. Average and under average students give judgment and use them to prove (although these are not rigorous and sometimes have misconception)
- Students move from intellectual activity to the other flexibly. They use analysis, synthesis, comparison to solve the problem. They use knowledge, thinking that not imitate and not effect from the previous experience, method and mindset
- Students recognize object, problem in different ways as well as find many solutions. Excellent and good students have the ability to see the problem in a comprehensive way. They can see the relation of the outside matter seemingly have no relation to each other.
- Excellent and good students pay attention to overturning, specializing and generalizing the problem not only at the outside level but also at the inside one. Average and under average students initially consider to overturn, specialize and generalize the problem at the outside level.

CONCLUSION

After having carried out the research and implemented the thesis, we obtain some specific results as follows:

- Through the theory and reality, we give some basic characteristics of critical thinking, creative thinking in Math of under average, average, good and excellent students. Thereby, we affirm that the critical and creative thinking factors are not only in excellent and good students. Each normal student can develop qualities of critical and creative thinking at different levels.
- To develop thinking of every student, it is essential to build an environment that encourages and promotes thinking in the class. Thinking classroom will create such a study environment. Thinking classroom is the class where each individual really think. That is the class in which every student has the opportunity and is encouraged to develop their own critical and creative thinking appropriately in the interactive learning environment. The thesis gives some typical characteristics of the Thinking classroom through three factors: environment, teachers and students.
- Through reality research, we believe that nowadays education and development for every student at high schools have not been paid proper attention. Lesson plans of teachers only

focused on solving tasks of transfer knowledge but not interested to develop students' thinking. In teaching, most teachers only pay attention and try to explain all contents in textbook. Teachers has used some methods, activities which have no effect on the development of thinking, critical and creative thinking. Teachers hardly use effective methods to help build up Thinking classroom in particular.

- Based on the theory and reality were presented in Chapter 1 and Chapter 2, in Chapter 3 we suggest five methods of building up thinking classroom: building up the system of learning tasks and objectives and Mathematical exercises system of developing critical and creative thinking; Motivating, inspiring and stimulating students' thinking by putting the contents in different situations; Increasing the use of effective question system; Activing thinking through multi-interactive group; Training each student self-learning plan, self-monitoring, evaluation and adjustment of their awareness and learning process. The methods that we have presented have logical and dialectic relationship to each other, each method has a role in the support and complement one another. We can state that the methods reflect the important steps of teaching process.

- Methods built up in the thesis are not only applied in space goemetry but also in other subjects at high school. However, these are not teachers' lesson plans or plans that are ideology-oriented, anonymous methodology for teachers to design and organize lesson. The application of the above measures which is a flexible art, dynamic change based on the subjects taught (according to the knowledge content, characteristics of students, ...) aim at the final objective to create Thinking classroom for thinking development in general, critical and creative thinking in particular for every student effectively.